Chapter 6.
The Link Layer and LANs

Yunmin Go

School of CSEE

Handong Global University

Link layer and LANs: our goals

- understand principles behind link layer services:
  - link layer addressing
  - local area networks: Ethernet
- instantiation, implementation of various link layer technologies

Link layer, LANs: roadmap

- introduction
- LANs
  - addressing, ARP
  - Ethernet
  - switches
- a day in the life of a web request

Link layer: context

- datagram transferred by different link protocols over different links:
  - e.g., WiFi on first link, Ethernet on next link
- each link protocol provides different services
  - e.g., may or may not provide reliable data transfer over link

transportation analogy:

- trip from Princeton to Lausanne
  - limo: Princeton to JFK
  - plane: JFK to Geneva
  - train: Geneva to Lausanne
- tourist = datagram
- transport segment = communication link
- transportation mode = link-layer protocol
- travel agent = routing algorithm

Link layer: services

- framing, link access:
  - encapsulate datagram into frame, adding header, trailer
  - channel access if shared medium
  - "MAC" addresses in frame headers identify source, destination (different from IP address!)
- reliable delivery between adjacent nodes
  - we already know how to do this!
  - seldom used on low bit-error links
  - wireless links: high error rates
    - *Q:* why both link-level and end-end reliability?

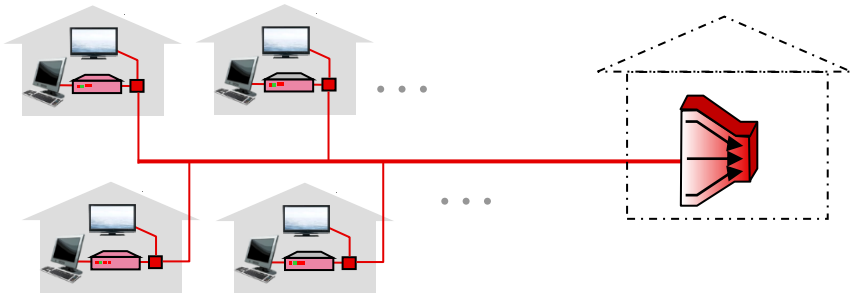

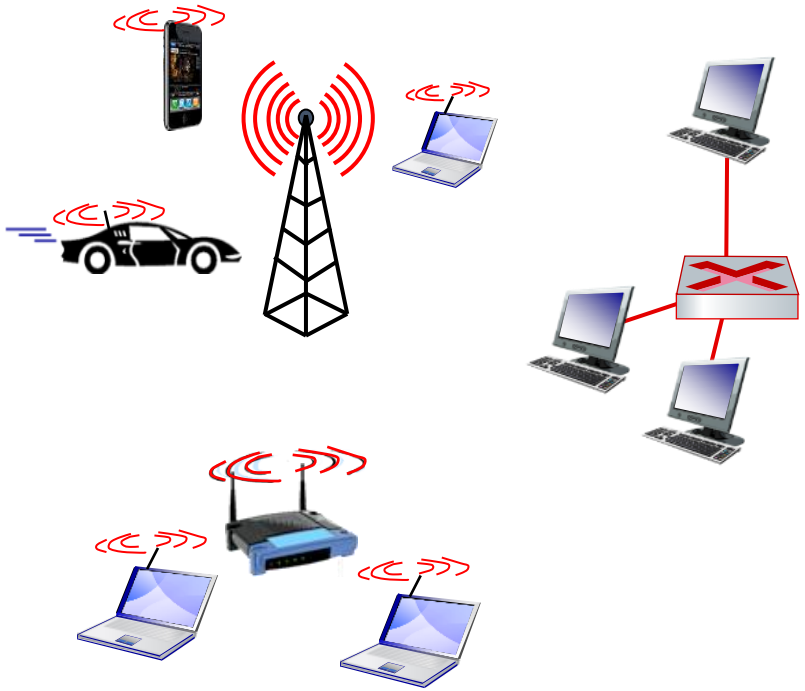

Link layer: introduction

terminology:

- hosts and routers: nodes
- communication channels that connect adjacent nodes along communication path: links
  - wired
  - wireless
  - LANs
- layer-2 packet: *frame*, encapsulates datagram

link layer has responsibility of transferring datagram from one node to physically adjacent node over a link

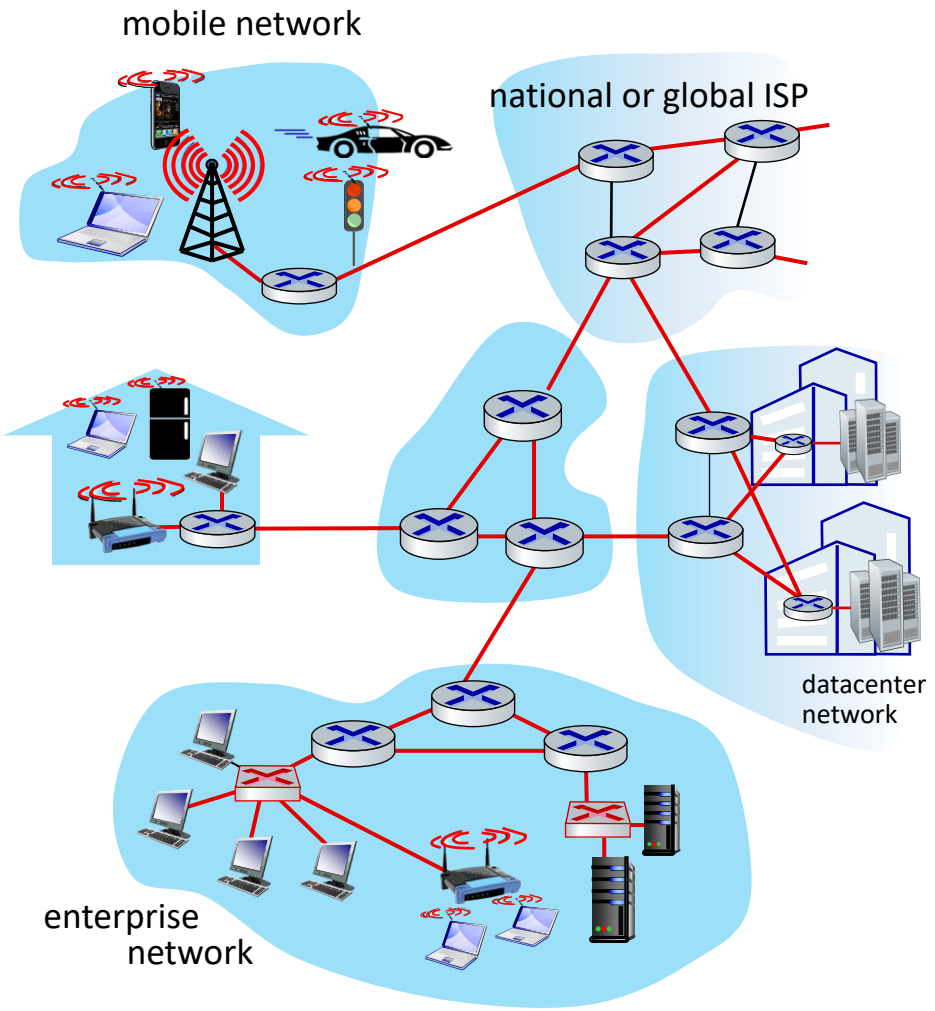

Link layer: services (more)

- flow control:
  - pacing between adjacent sending and receiving nodes
- error detection:
  - errors caused by signal attenuation, noise.
  - receiver detects errors, signals retransmission, or drops frame
- error correction:
  - receiver identifies *and corrects* bit error(s) without retransmission
- half-duplex and full-duplex:
  - with half duplex, nodes at both ends of link can transmit, but not at same time

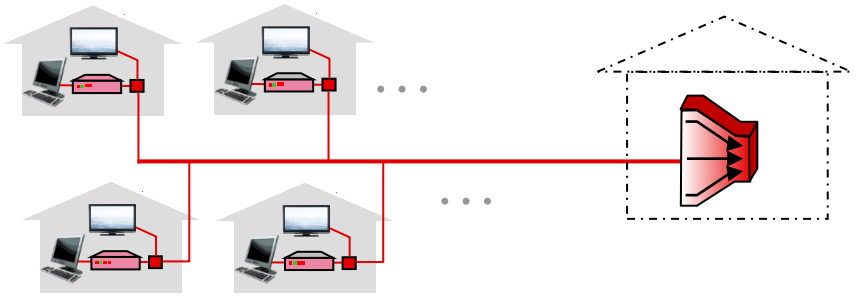

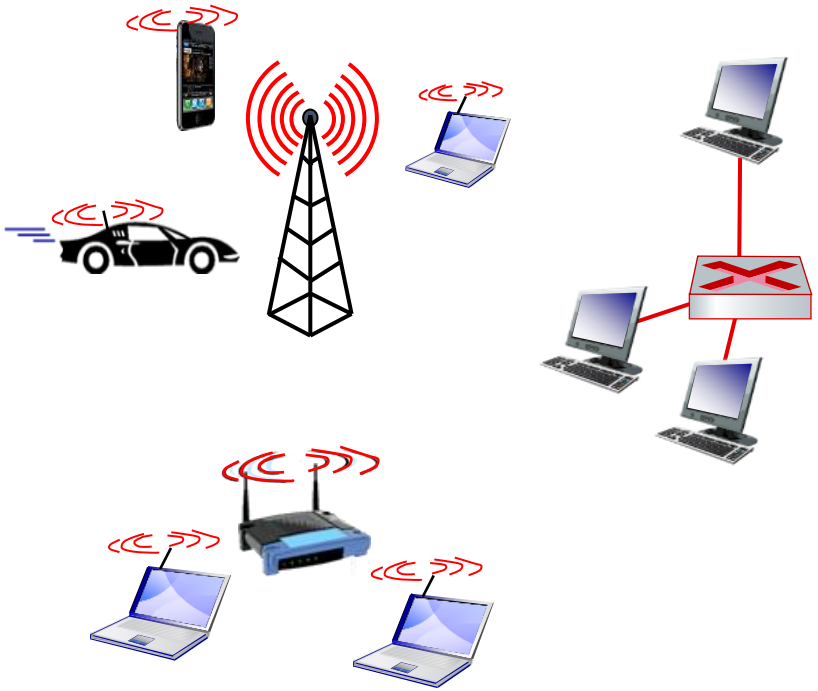

Multiple access links, protocols

two types of "links":

- point-to-point
  - point-to-point link between Ethernet switch, host
  - PPP for dial-up access
- broadcast (shared wire or medium)
  - old-fashioned Ethernet
  - upstream HFC in cable-based access network
  - 802.11 wireless LAN, 4G/4G. satellite

shared wire (e.g., cabled Ethernet)

shared radio: 4G/5G

shared radio: WiFi

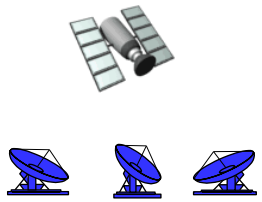

shared radio: satellite

humans at a cocktail party (shared air, acoustical)

Multiple access protocols

- single shared broadcast channel
- two or more simultaneous transmissions by nodes: interference
  - *collision* if node receives two or more signals at the same time

multiple access protocol

- distributed algorithm that determines how nodes share channel, i.e., determine when node can transmit
- communication about channel sharing must use channel itself!
  - no out-of-band channel for coordination

Where is the link layer implemented?

- in each-and-every host
- link layer implemented in *network interface card* (NIC) or on a chip
  - Ethernet, WiFi card or chip
  - implements link, physical layer
- attaches into host's system buses
- combination of hardware, software, firmware

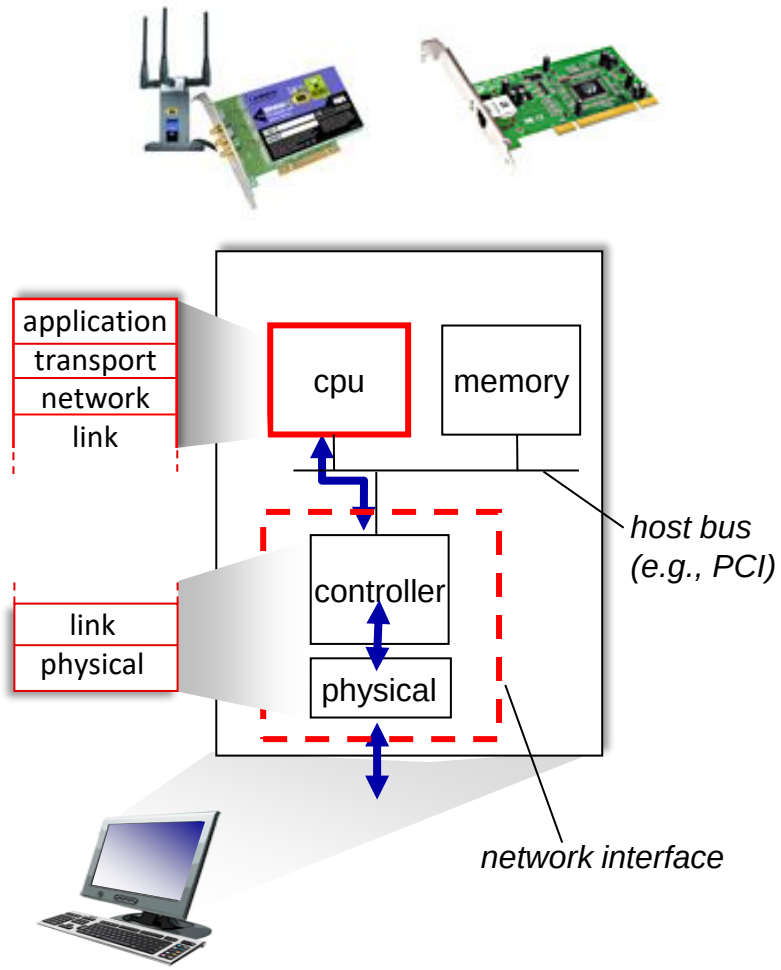

Interfaces communicating

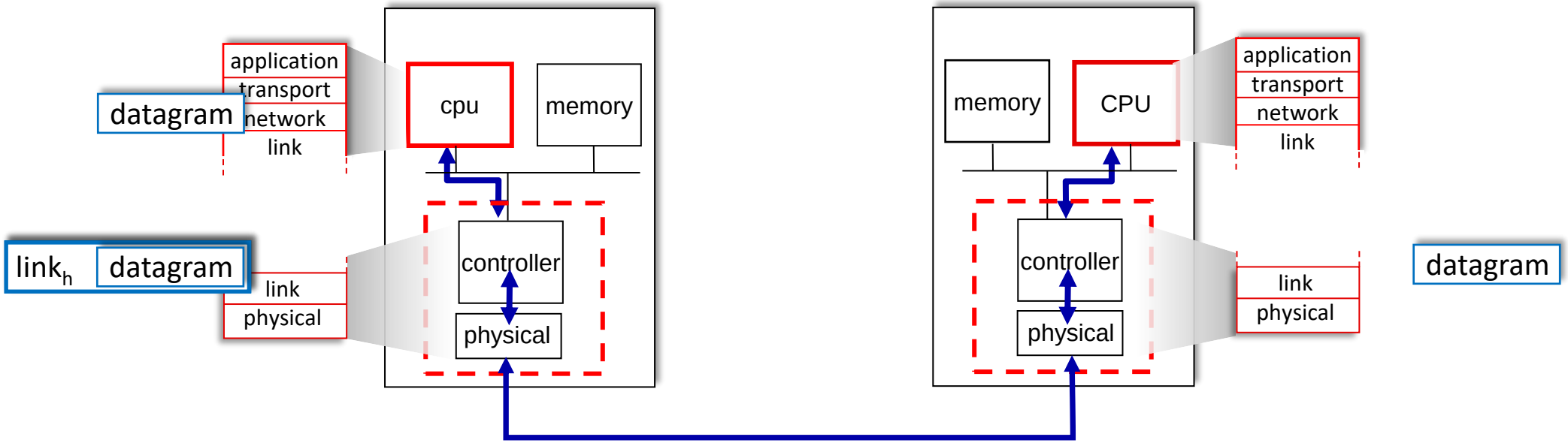

sending side:

- encapsulates datagram in frame
- adds error checking bits, reliable data transfer, flow control, etc.

receiving side:

- looks for errors, reliable data transfer, flow control, etc.
- extracts datagram, passes to upper layer at receiving side

Link layer, LANs: roadmap

- introduction
- LANs
  - addressing, ARP
  - Ethernet
  - switches
- a day in the life of a web request

MAC addresses

- 32-bit IP address:
  - *network-layer* address for interface
  - used for layer 3 (network layer) forwarding
  - e.g.: 128.119.40.136
- MAC (or LAN or physical or Ethernet) address:
  - function: used "locally" to get frame from one interface to another physically-connected interface (same subnet, in IP-addressing sense)
  - 48-bit MAC address (for most LANs) burned in NIC ROM, also sometimes software settable
  - e.g.: 1A-2F-BB-76-09-AD

hexadecimal (base 16) notation
(each "numeral" represents 4 bits)

MAC addresses

each interface on LAN

- has unique 48-bit MAC address
- has a locally unique 32-bit IP address (as we've seen)

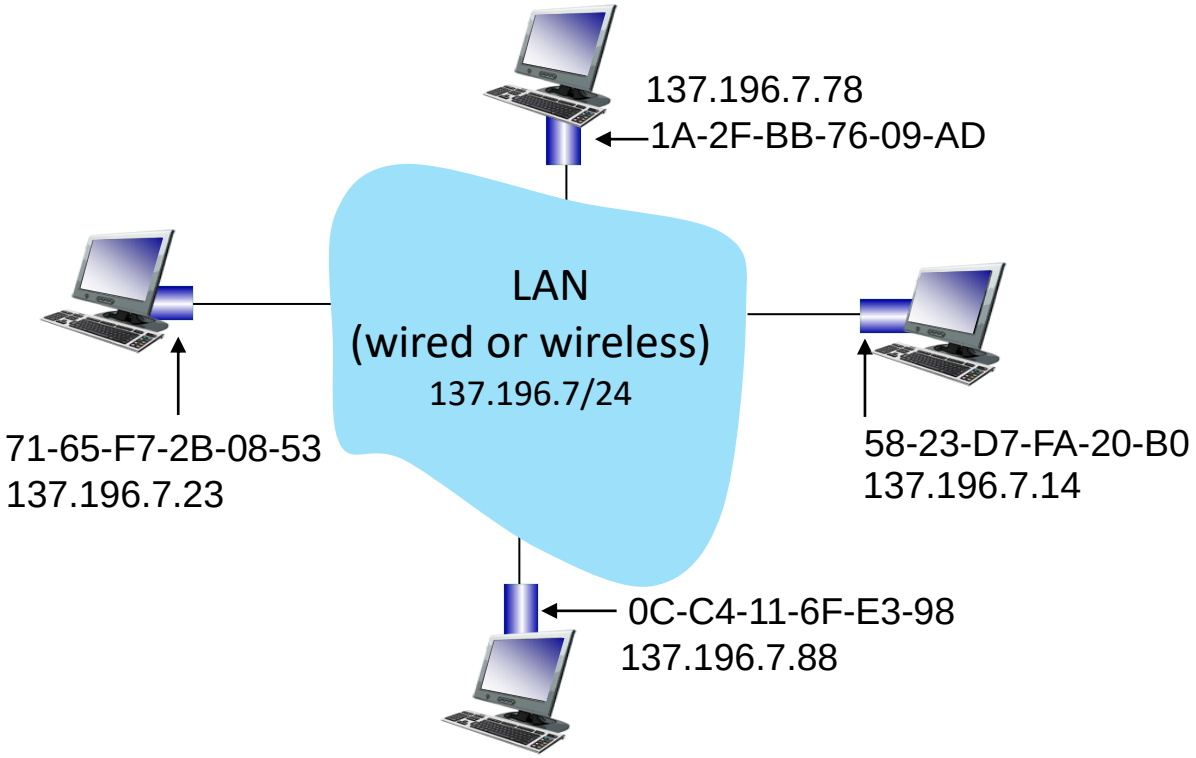

MAC addresses

- MAC address allocation administered by IEEE
- manufacturer buys portion of MAC address space (to assure uniqueness)
- analogy:
  - MAC address: like Social Security Number
  - IP address: like postal address
- MAC flat address: portability
  - can move interface from one LAN to another
  - recall IP address *not* portable: depends on IP subnet to which node is attached

ARP: address resolution protocol

Question: how to determine interface's MAC address, knowing its IP address?

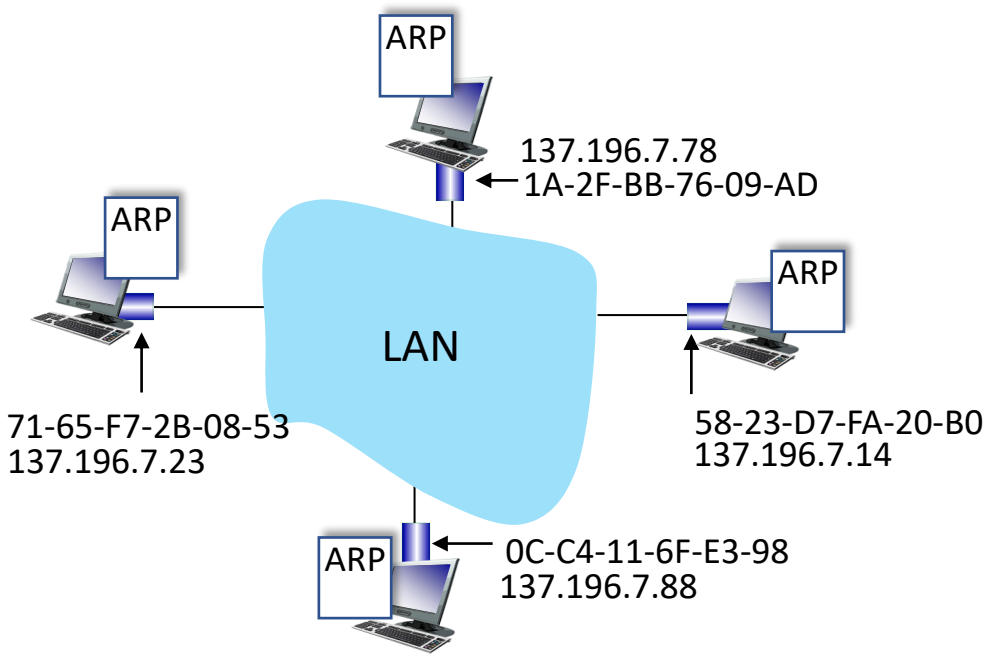

ARP table: each IP node (host, router) on LAN has table

- IP/MAC address mappings for some LAN nodes:

  < IP address; MAC address; TTL>

- TTL (Time To Live): time after which address mapping will be forgotten (typically 20 min)

ARP protocol in action

example: A wants to send datagram to B

- B's MAC address not in A's ARP table, so A uses ARP to find B's MAC address

A broadcasts ARP query, containing B's IP addr

1
- destination MAC address = FF-FF-FF-FF-FF-FF
- all nodes on LAN receive ARP query

ARP table in A

IP addr	MAC addr	TTL

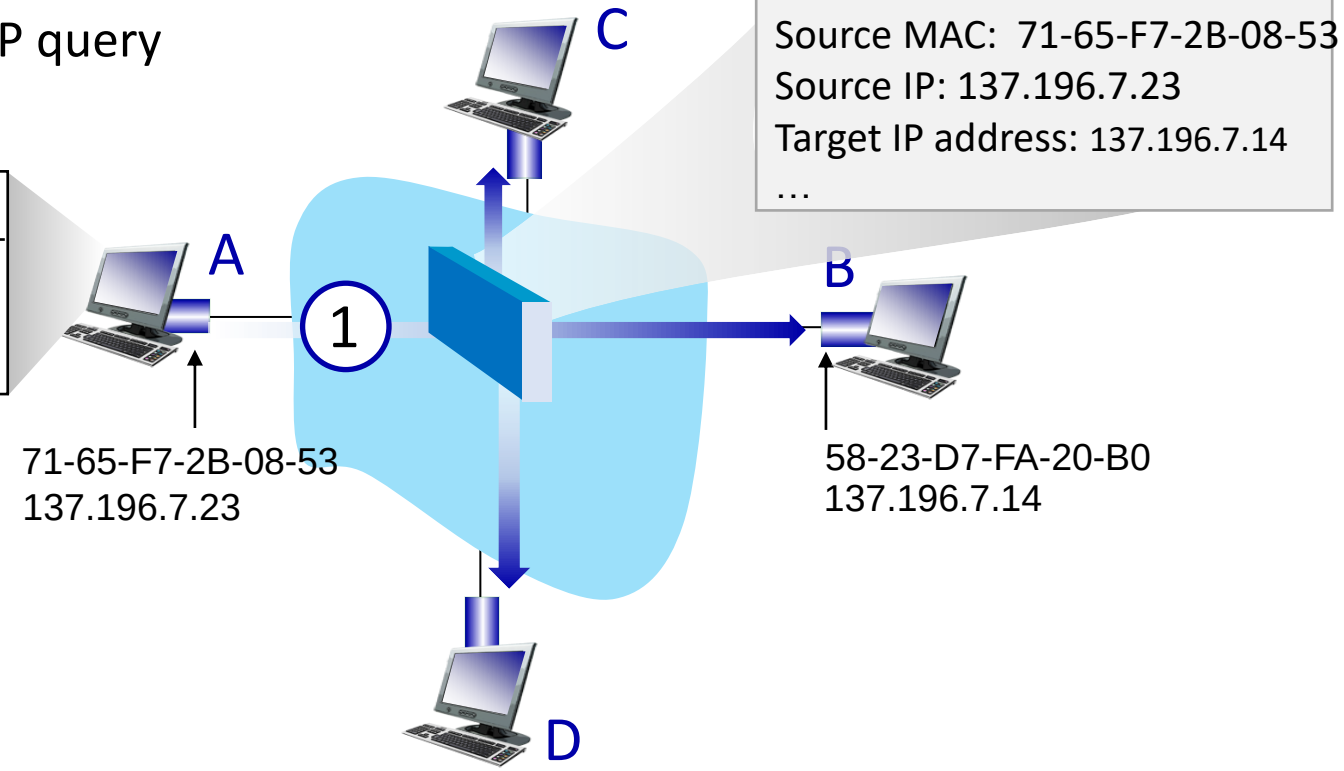

ARP protocol in action

example: A wants to send datagram to B

- B's MAC address not in A's ARP table, so A uses ARP to find B's MAC address

ARP table in A

IP addr	MAC addr	TTL

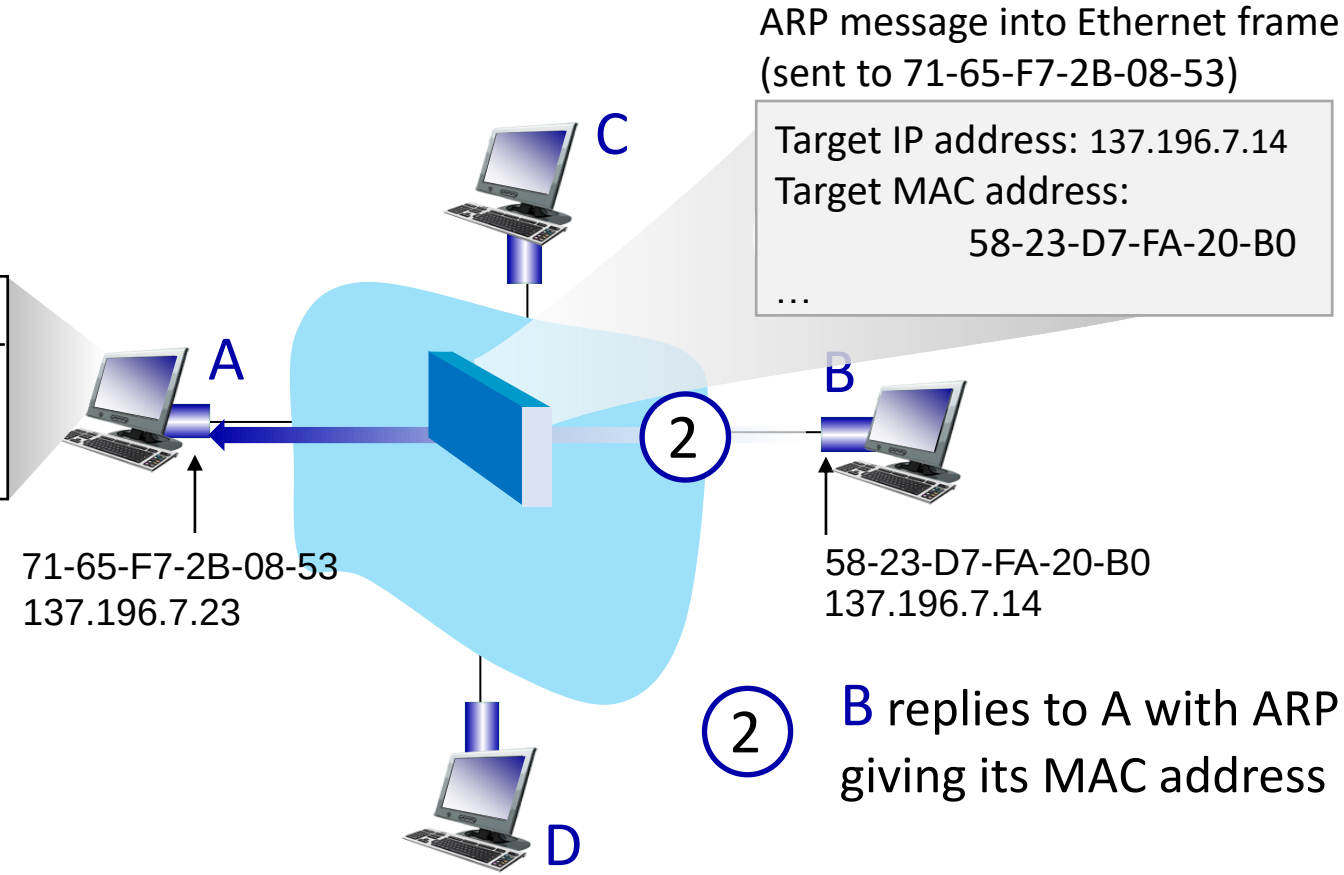

2 B replies to A with ARP response, giving its MAC address

ARP protocol in action

example: A wants to send datagram to B

- B's MAC address not in A's ARP table, so A uses ARP to find B's MAC address

ARP table in A

IP addr	MAC addr	TTL
137.196.7.14	58-23-D7-FA-20-B0	500

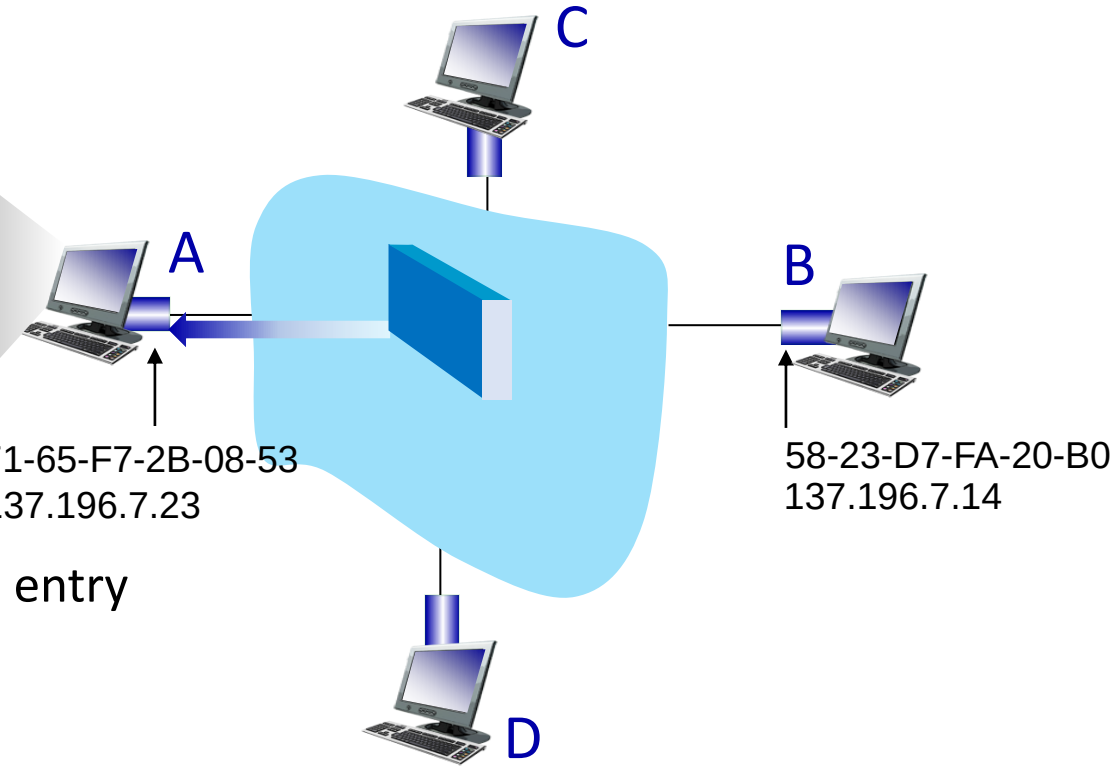

3 A receives B's reply, adds B entry into its local ARP table

Routing to another subnet: addressing

walkthrough: sending a datagram from *A* to *B* via *R*

- focus on addressing – at IP (datagram) and MAC layer (frame) levels
- assume that:
  - A knows B's IP address
  - A knows IP address of first hop router, R (how?)
  - A knows R's MAC address (how?)

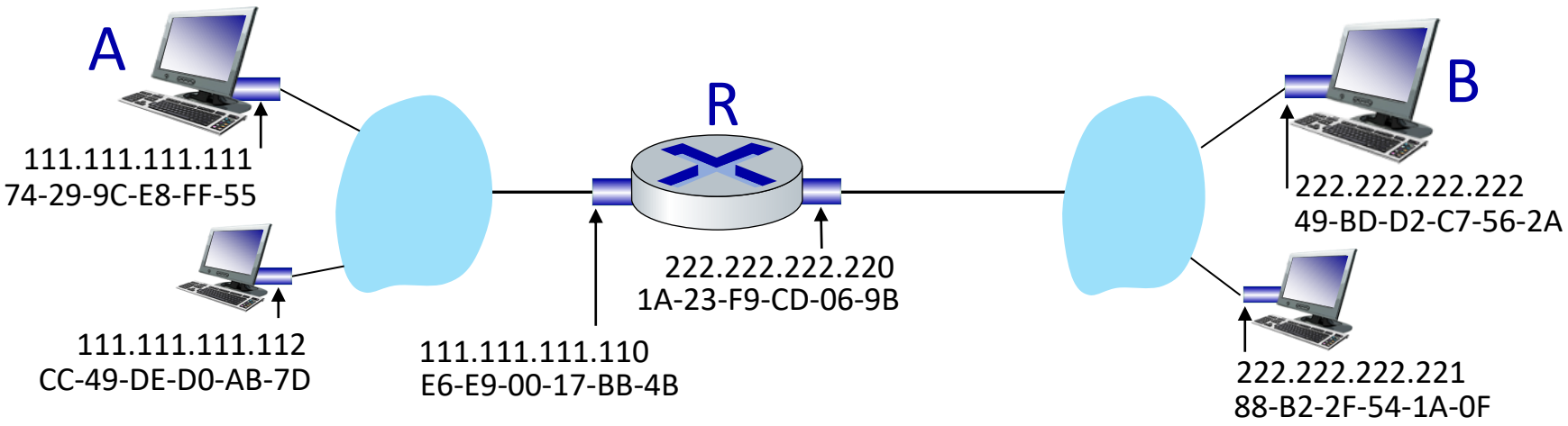

Routing to another subnet: addressing

- A creates IP datagram with IP source A, destination B
- A creates link-layer frame containing A-to-B IP datagram
  - R's MAC address is frame's destination

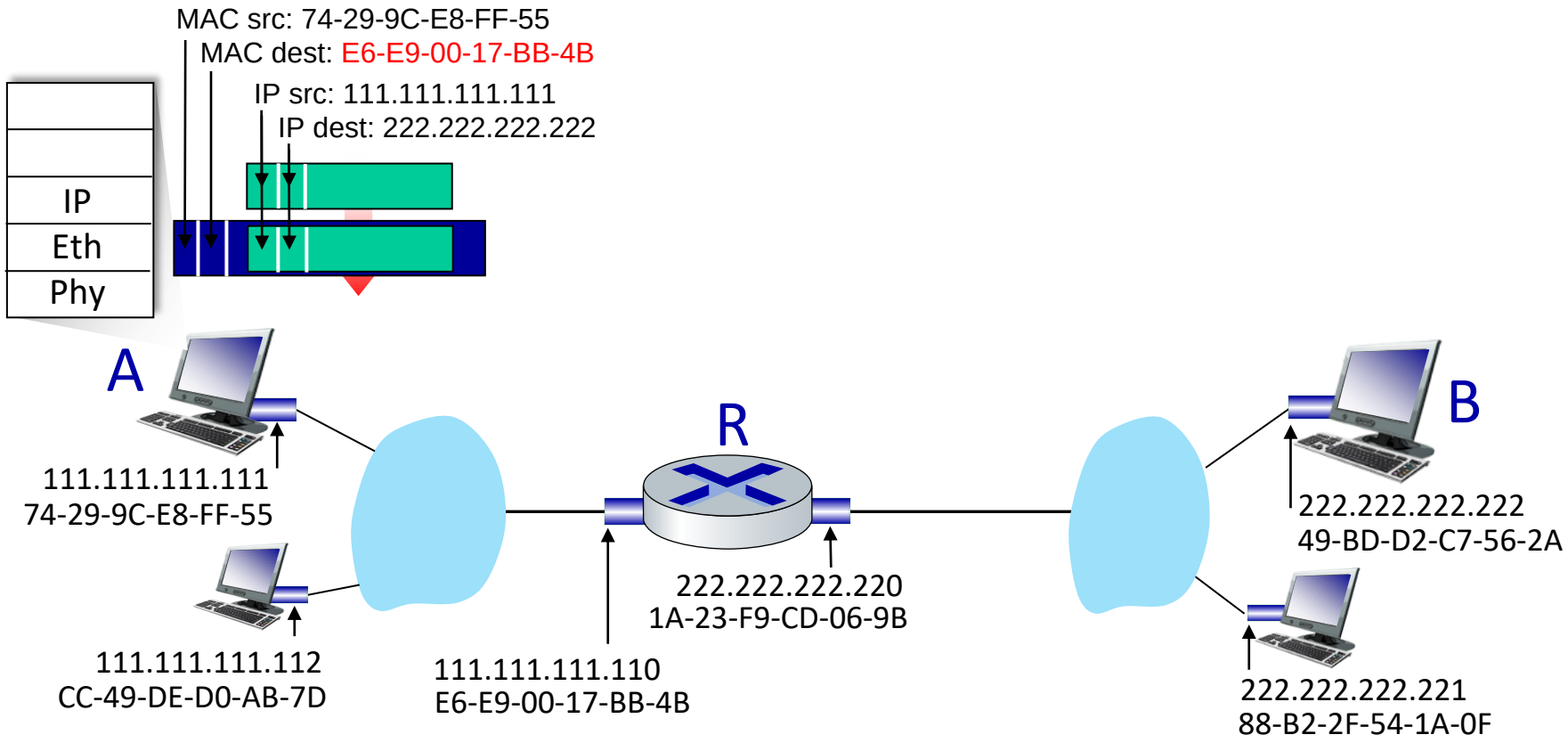

Routing to another subnet: addressing

- frame sent from A to R
- frame received at R, datagram removed, passed up to IP

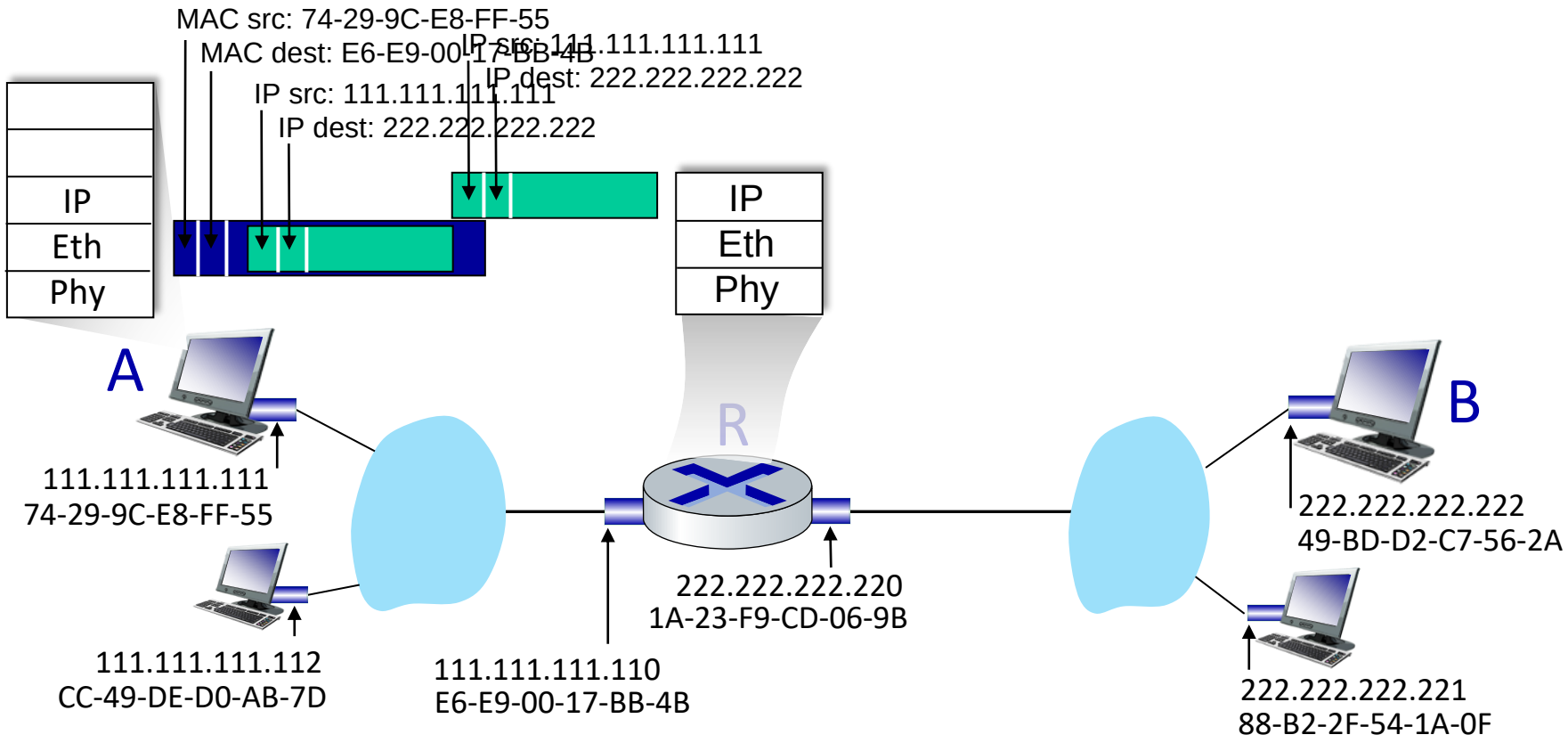

Routing to another subnet: addressing

- R determines outgoing interface, passes datagram with IP source A, destination B to link layer
- R creates link-layer frame containing A-to-B IP datagram. Frame destination address: B's MAC address

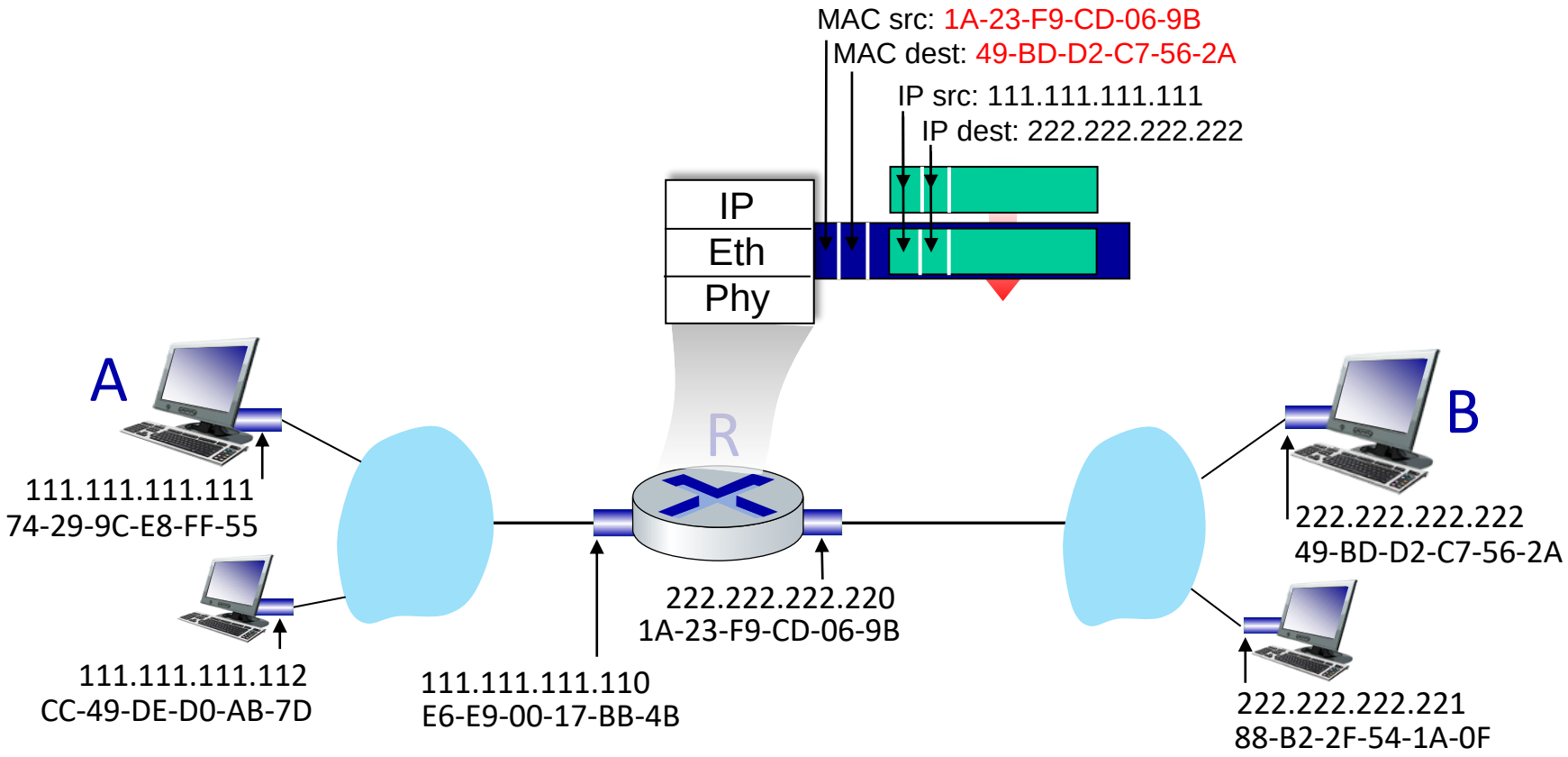

Routing to another subnet: addressing

- R determines outgoing interface, passes datagram with IP source A, destination B to link layer
- R creates link-layer frame containing A-to-B IP datagram. Frame destination address: B's MAC address
- transmits link-layer frame

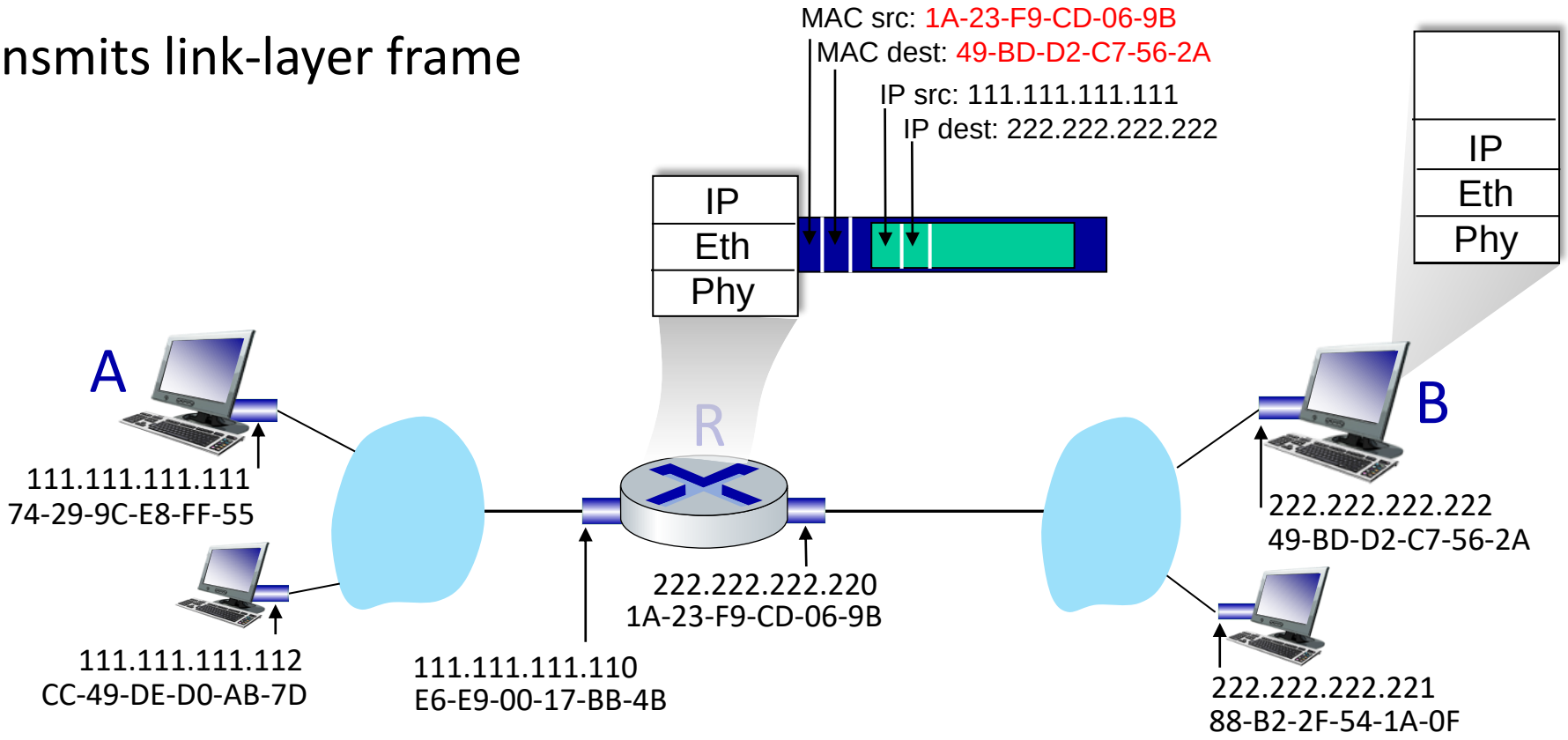

Routing to another subnet: addressing

- B receives frame, extracts IP datagram destination B
- B passes datagram up protocol stack to IP

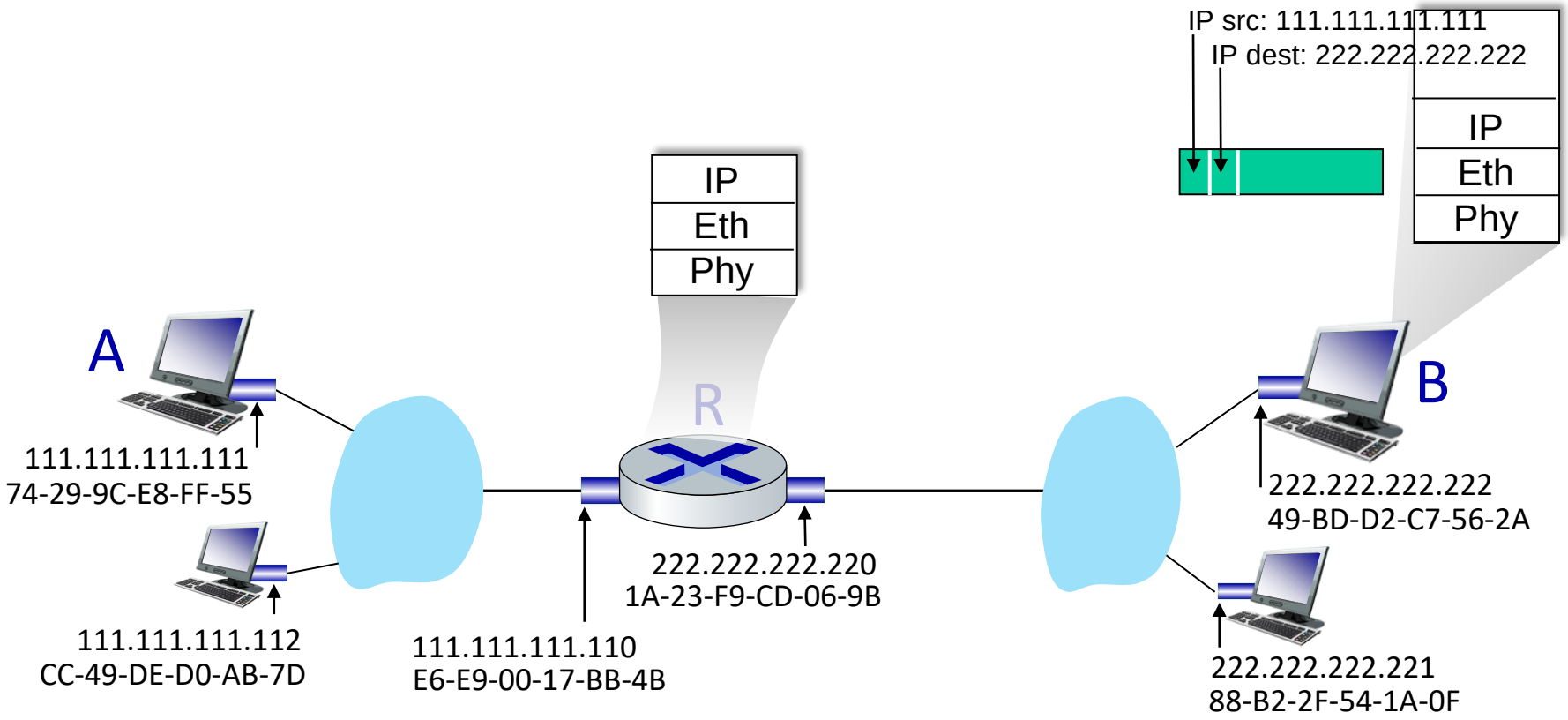

Link layer, LANs: roadmap

- introduction
- LANs
  - addressing, ARP
  - Ethernet
  - switches
- a day in the life of a web request

Ethernet

"dominant" wired LAN technology:

- first widely used LAN technology
- simpler, cheap
- kept up with speed race: 10 Mbps – 400 Gbps
- single chip, multiple speeds (e.g., Broadcom BCM5761)

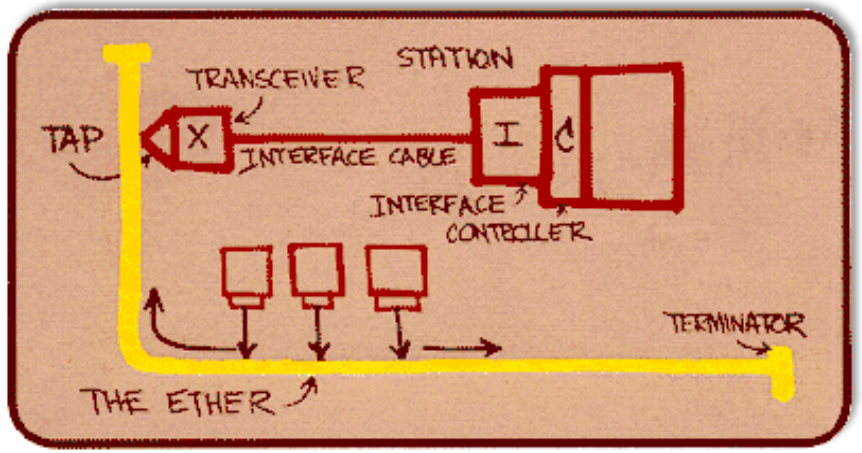

Metcalfe's Ethernet sketch

https://www.uspto.gov/learning-and-resources/journeys-innovation/audio-stories/defying-doubters

Ethernet: physical topology

- bus: popular through mid 90s
  - all nodes in same collision domain (can collide with each other)
- switched: prevails today
  - active link-layer 2 *switch* in center
  - each "spoke" runs a (separate) Ethernet protocol (nodes do not collide with each other)

bus: coaxial cable

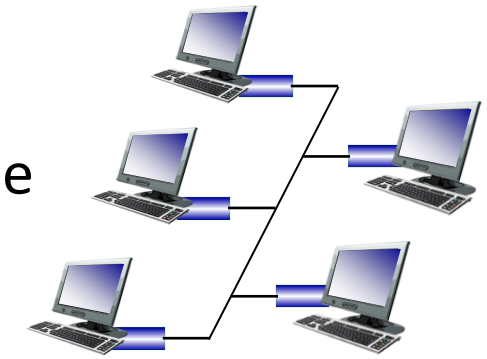

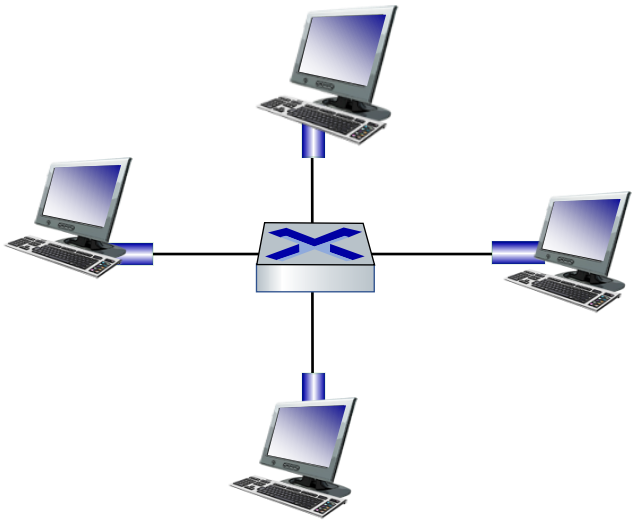

switched

Ethernet frame structure

sending interface encapsulates IP datagram (or other network layer protocol packet) in Ethernet frame

preamble:

- used to synchronize receiver, sender clock rates
- 7 bytes of 10101010 followed by one byte of 10101011

Ethernet frame structure (more)

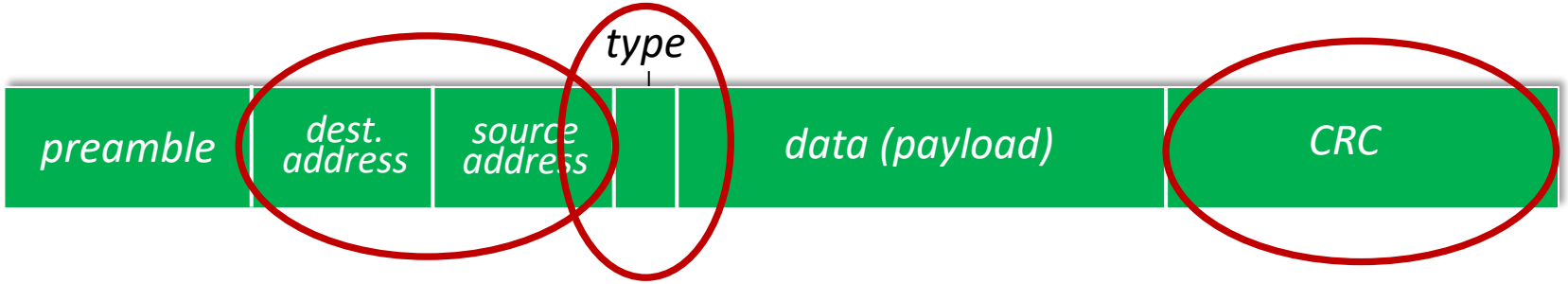

- addresses: 6 byte source, destination MAC addresses
  - if adapter receives frame with matching destination address, or with broadcast address (e.g., ARP packet), it passes data in frame to network layer protocol
  - otherwise, adapter discards frame
- type: indicates higher layer protocol
  - mostly IP but others possible, e.g., Novell IPX, AppleTalk
  - used to demultiplex up at receiver
- CRC: cyclic redundancy check at receiver
  - error detected: frame is dropped

Ethernet: unreliable, connectionless

- connectionless: no handshaking between sending and receiving NICs
- unreliable: receiving NIC doesn't send ACKs or NAKs to sending NIC
  - data in dropped frames recovered only if initial sender uses higher layer rdt (e.g., TCP), otherwise dropped data lost
- Ethernet's MAC protocol: unslotted CSMA/CD with binary backoff

802.3 Ethernet standards: link & physical layers

- *many* different Ethernet standards
  - common MAC protocol and frame format
  - different speeds: 2 Mbps, 10 Mbps, 100 Mbps, 1Gbps, 10 Gbps, 40 Gbps
  - different physical layer media: fiber, cable

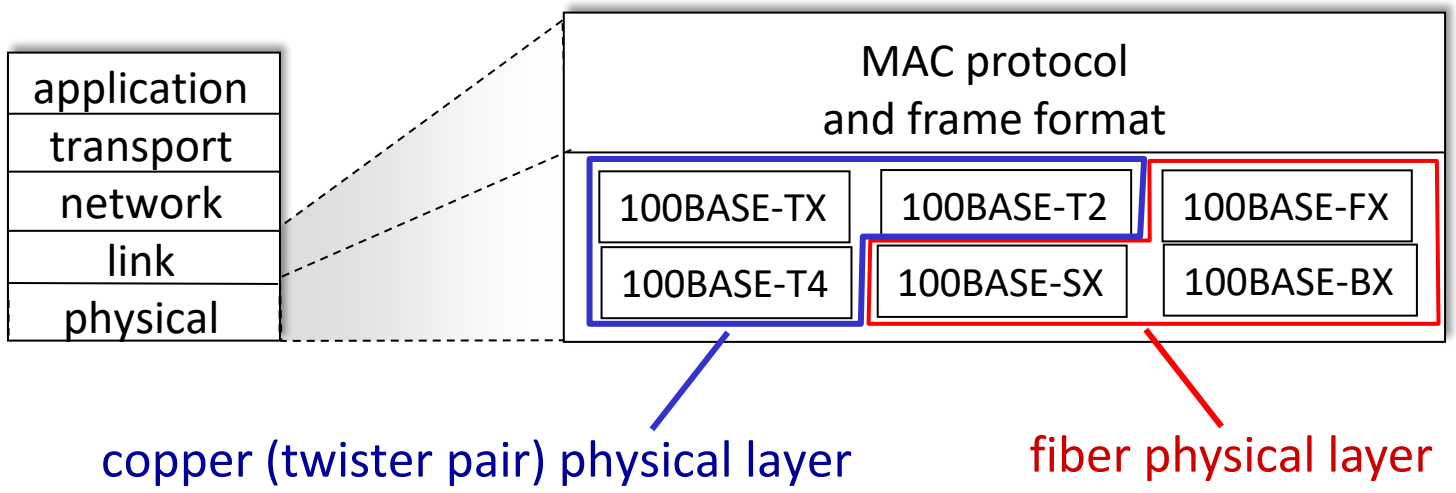

Link layer, LANs: roadmap

- introduction
- LANs
  - addressing, ARP
  - Ethernet
  - switches
- a day in the life of a web request

Ethernet switch

- Switch is a link-layer device: takes an *active* role
  - store, forward Ethernet frames
  - examine incoming frame's MAC address, *selectively* forward frame to one-or-more outgoing links when frame is to be forwarded on segment, uses CSMA/CD to access segment
- transparent: hosts *unaware* of presence of switches
- plug-and-play, self-learning
  - switches do not need to be configured

Switch: multiple simultaneous transmissions

- hosts have dedicated, direct connection to switch
- switches buffer packets
- Ethernet protocol used on *each* incoming link, so:
  - no collisions; full duplex
  - each link is its own collision domain
- switching: A-to-A' and B-to-B' can transmit simultaneously, without collisions

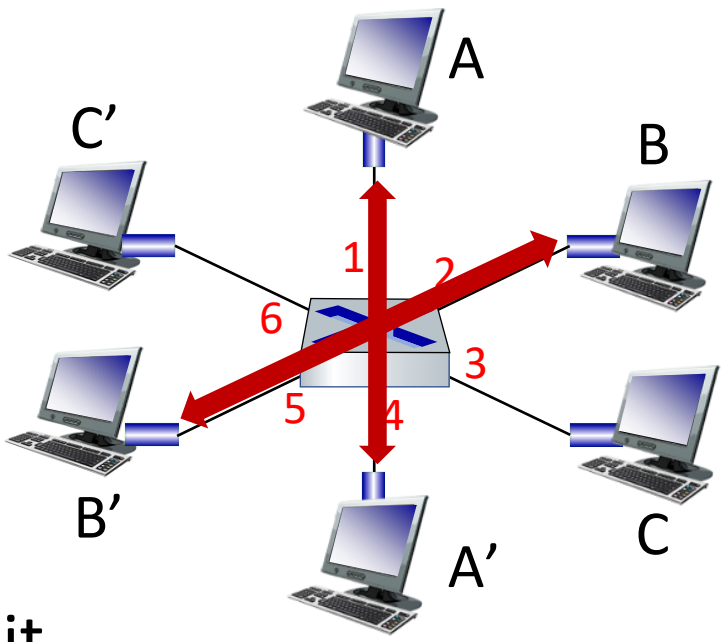

switch with six interfaces (1,2,3,4,5,6)

Switch: multiple simultaneous transmissions

- hosts have dedicated, direct connection to switch
- switches buffer packets
- Ethernet protocol used on *each* incoming link, so:
  - no collisions; full duplex
  - each link is its own collision domain
- switching: A-to-A' and B-to-B' can transmit simultaneously, without collisions
  - but A-to-A' and C to A' can *not* happen simultaneously

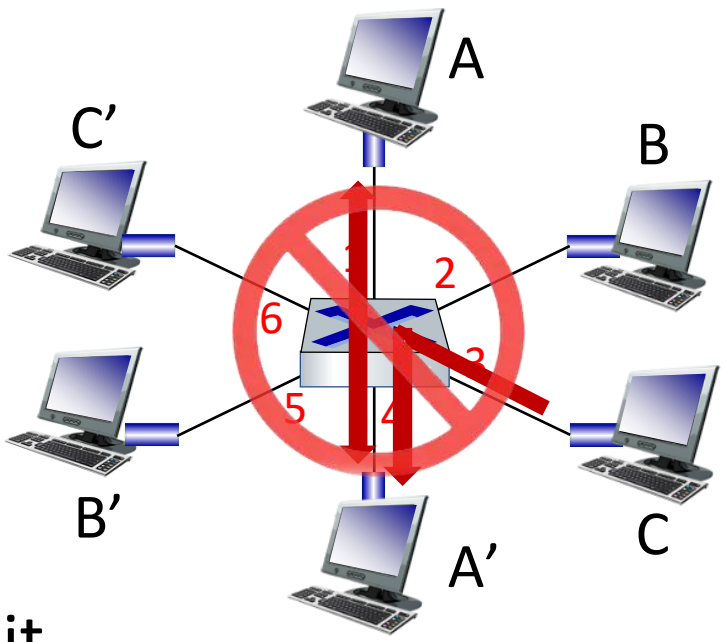

switch with six interfaces (1,2,3,4,5,6)

Switch forwarding table

Q: how does switch know A' reachable via interface 4, B' reachable via interface 5?

A: each switch has a switch table, each entry:

- (MAC address of host, interface to reach host, time stamp)
- looks like a routing table!

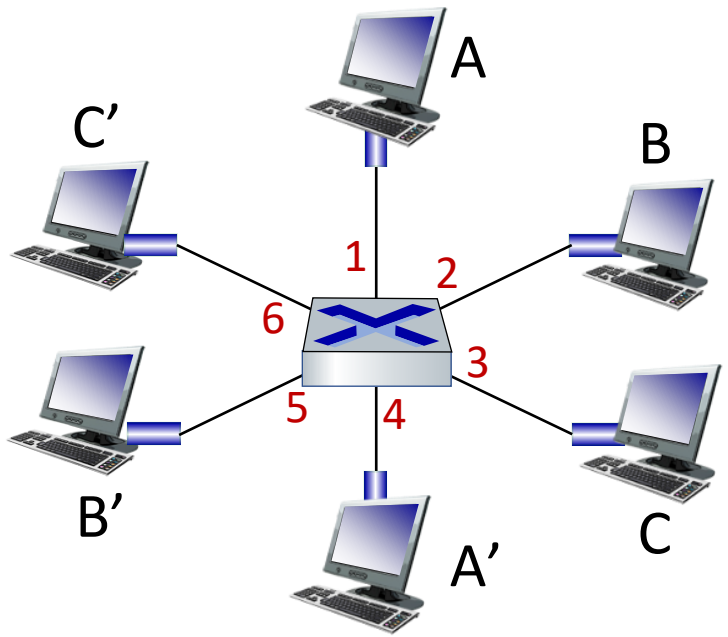

Q: how are entries created, maintained in switch table?

- something like a routing protocol?

Switch: self-learning

- switch *learns* which hosts can be reached through which interfaces
  - when frame received, switch "learns" location of sender: incoming LAN segment
  - records sender/location pair in switch table

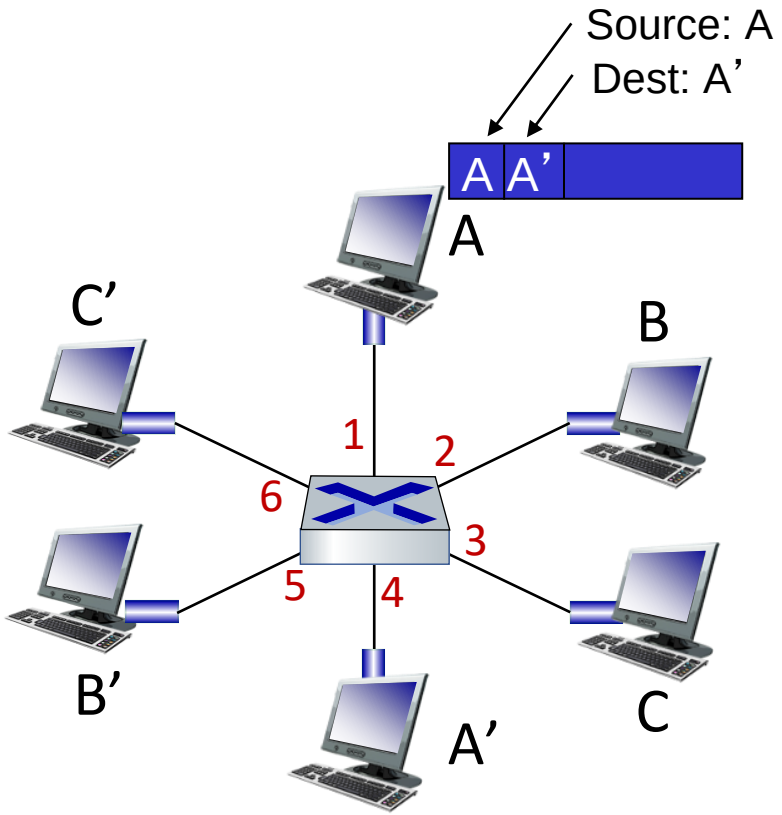

MAC addr	interface	TTL
A	*1*	*60*

Switch table (initially empty)

Switch: frame filtering/forwarding

when frame received at switch:

```
1. record incoming link, MAC address of sending host
2. index switch table using MAC destination address
3. if entry found for destination
   then {
        if destination on segment from which frame arrived
        then drop frame
        else forward frame on interface indicated by entry
   }
   else flood  /* forward on all interfaces except arriving interface */
```

Self-learning, forwarding: example

- frame destination, A’, location unknown: flood
- destination A location known: selectively send on just one link

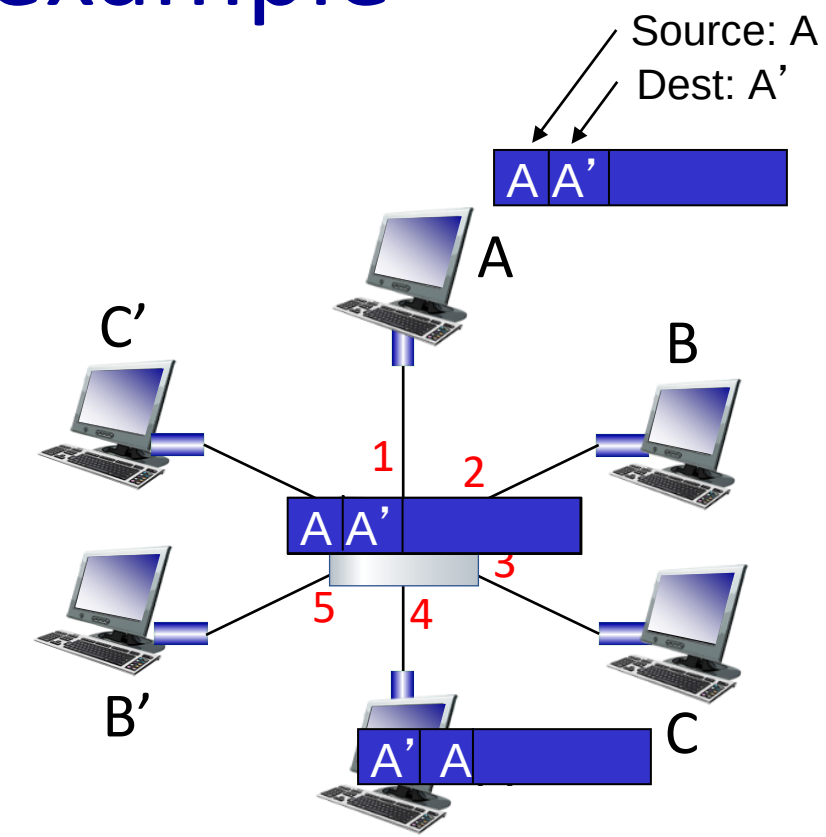

MAC addr	interface	TTL
A	*1*	*60*
A’	*4*	*60*

switch table (initially empty)

Interconnecting switches

self-learning switches can be connected together:

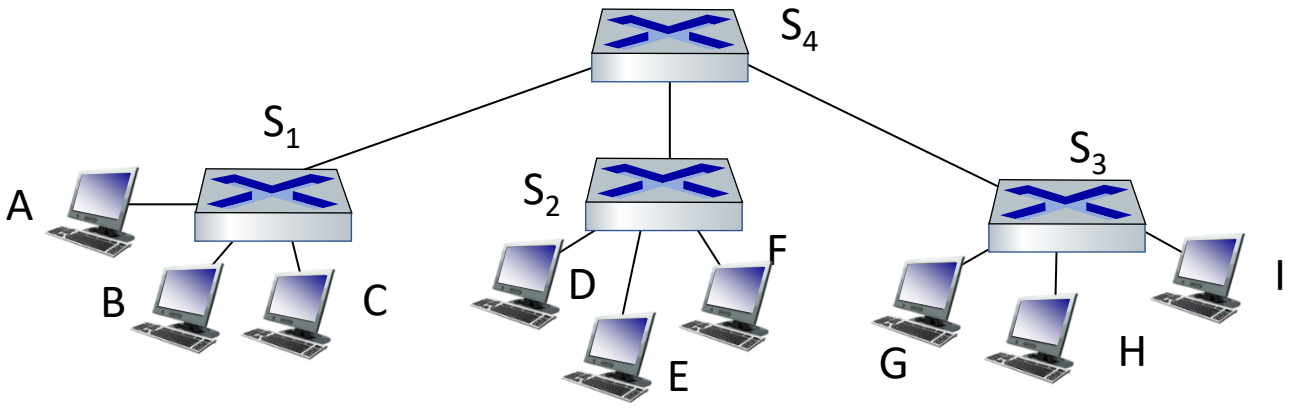

Q: sending from A to G - how does S_1 know to forward frame destined to G via S_4 and S_3?

- *A:* self learning! (works exactly the same as in single-switch case!)

Self-learning multi-switch example

Suppose C sends frame to I, I responds to C

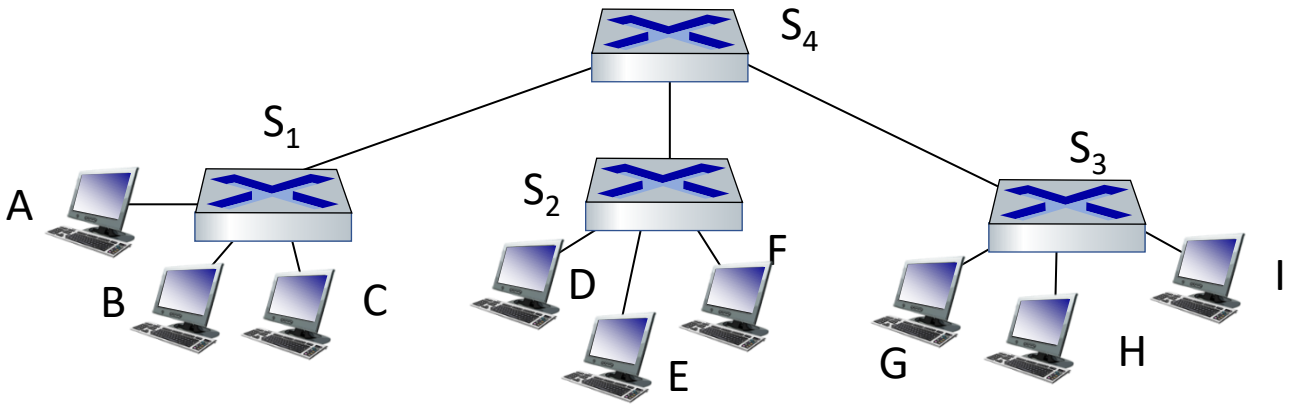

Q: show switch tables and packet forwarding in S_1, S_2, S_3, S_4

Small institutional network

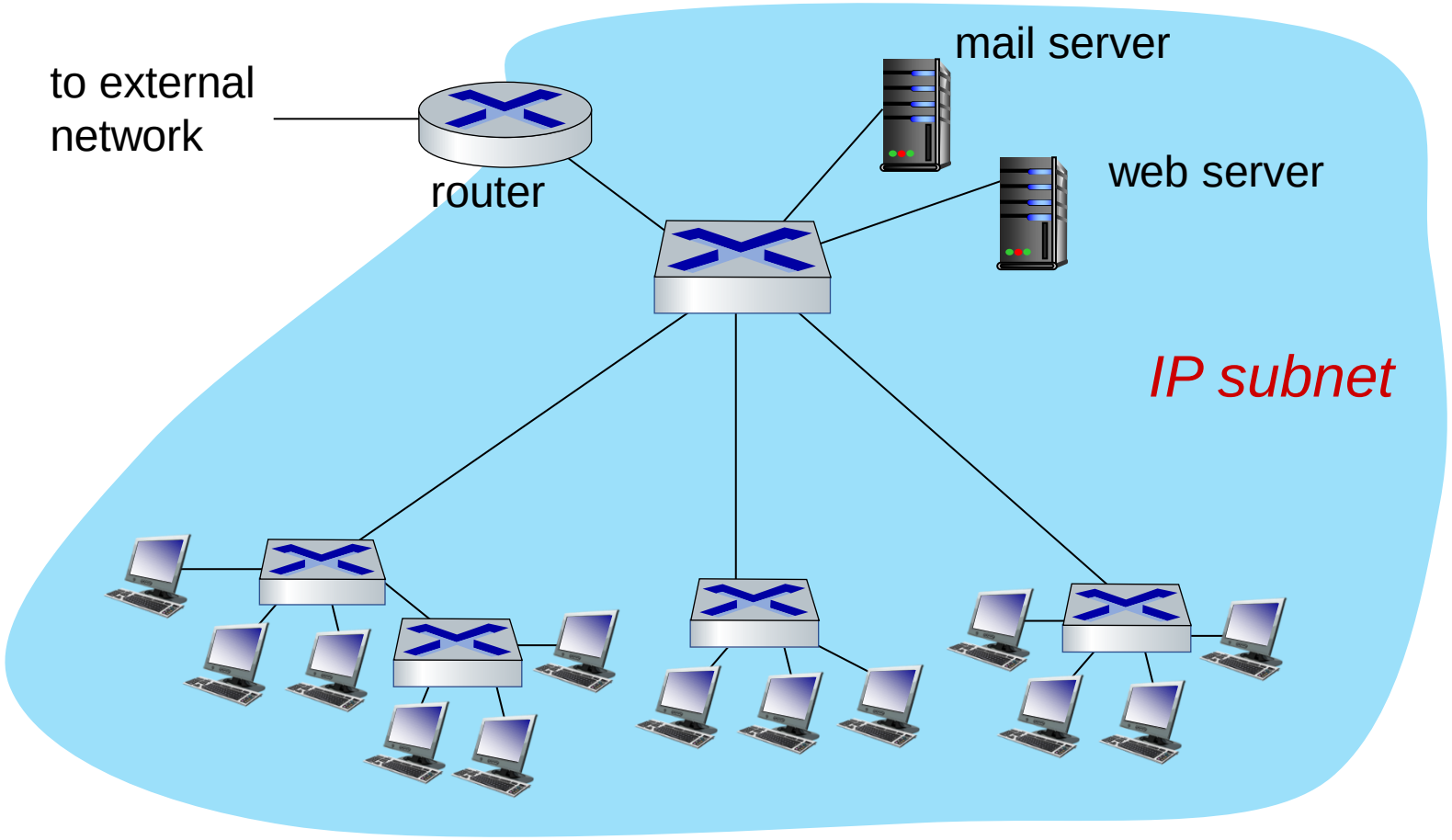

Switches vs. routers

both are store-and-forward:

- *routers*: network-layer devices (examine network-layer headers)
- *switches:* link-layer devices (examine link-layer headers)

both have forwarding tables:

- *routers:* compute tables using routing algorithms, IP addresses
- *switches:* learn forwarding table using flooding, learning, MAC addresses

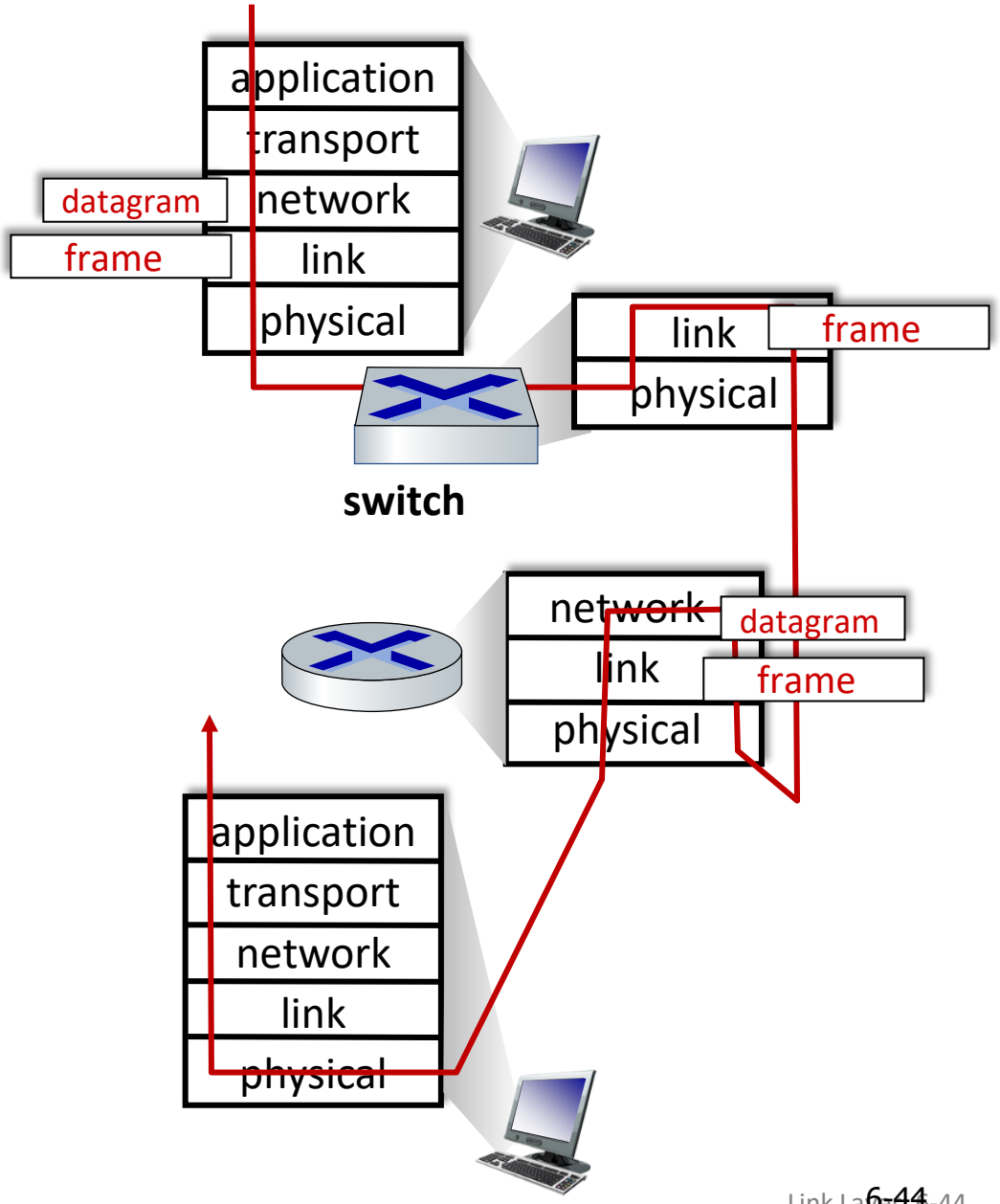

Link layer, LANs: roadmap

- introduction
- LANs
  - addressing, ARP
  - Ethernet
  - switches
- a day in the life of a web request

Synthesis: a day in the life of a web request

- our journey down the protocol stack is now complete!
  - application, transport, network, link
- putting-it-all-together: synthesis!
  - *goal:* identify, review, understand protocols (at all layers) involved in seemingly simple scenario: requesting www page
  - *scenario:* student attaches laptop to campus network, requests/receives www.google.com

A day in the life: scenario

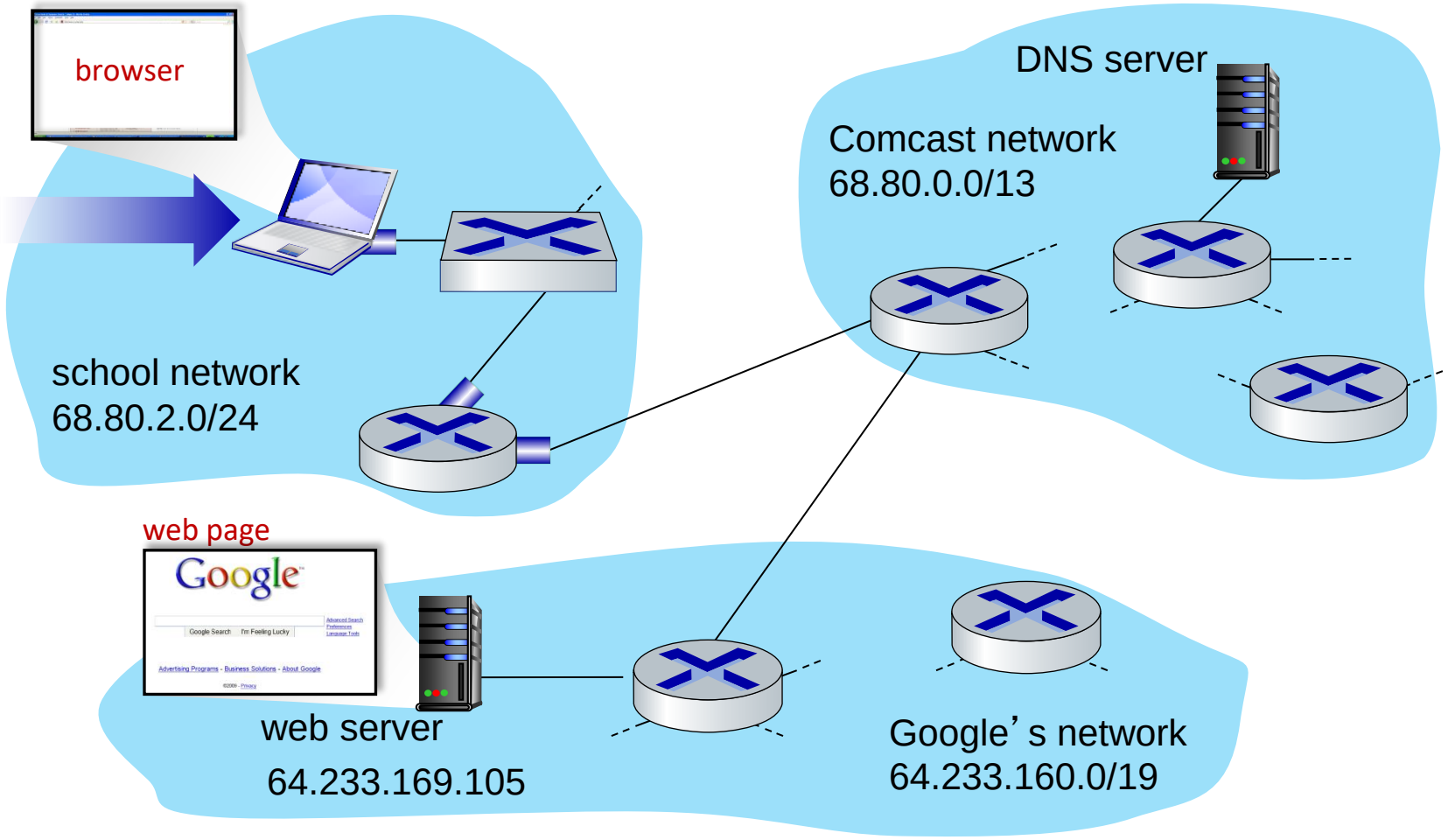

scenario:

- arriving mobile client attaches to network …
- requests web page: www.google.com

Sounds simple!

A day in the life: connecting to the Internet

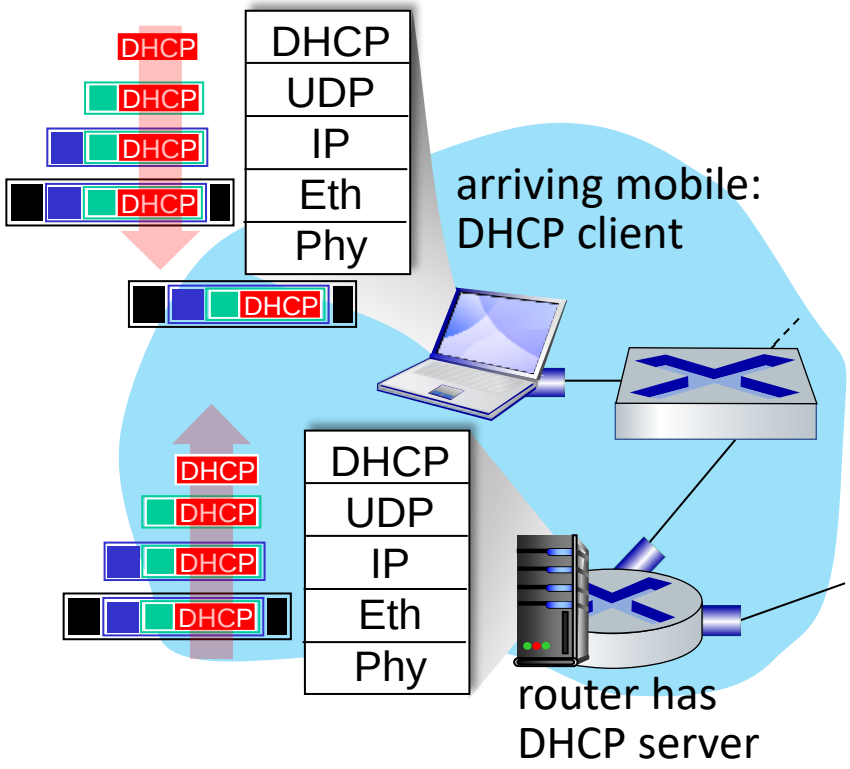

- connecting laptop needs to get its own IP address, addr of first-hop router, addr of DNS server: use DHCP
- DHCP request encapsulated in UDP, encapsulated in IP, encapsulated in 802.3 Ethernet
- Ethernet frame broadcast (dest: FFFFFFFFFFFF) on LAN, received at router running DHCP server
- Ethernet demuxed to IP demuxed, UDP demuxed to DHCP

A day in the life: connecting to the Internet

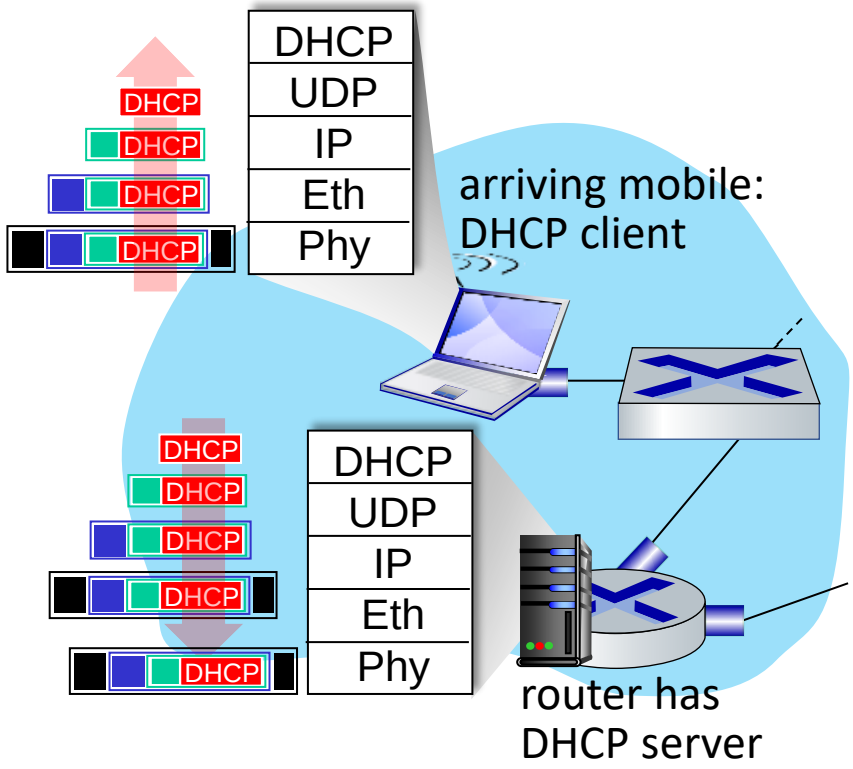

- DHCP server formulates DHCP ACK containing client's IP address, IP address of first-hop router for client, name & IP address of DNS server
- encapsulation at DHCP server, frame forwarded (switch learning) through LAN, demultiplexing at client
- DHCP client receives DHCP ACK reply

Client now has IP address, knows name & addr of DNS server, IP address of its first-hop router

A day in the life… ARP (before DNS, before HTTP)

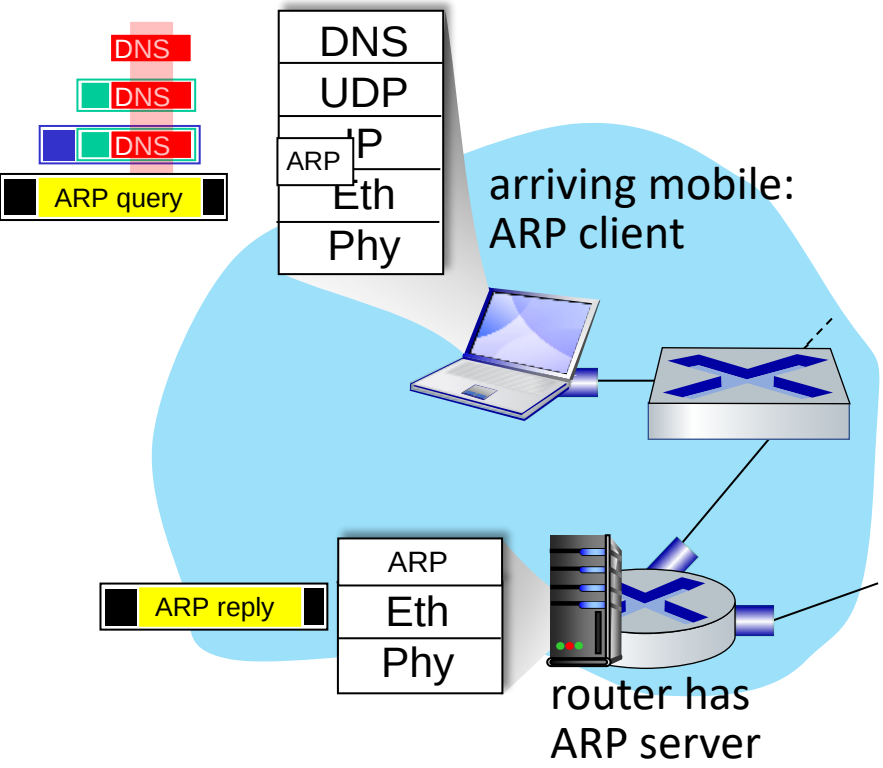

- before sending HTTP request, need IP address of www.google.com: DNS
- DNS query created, encapsulated in UDP, encapsulated in IP, encapsulated in Eth. To send frame to router, need MAC address of router interface: ARP
- ARP query broadcast, received by router, which replies with ARP reply giving MAC address of router interface
- client now knows MAC address of first hop router, so can now send frame containing DNS query

A day in the life… using DNS

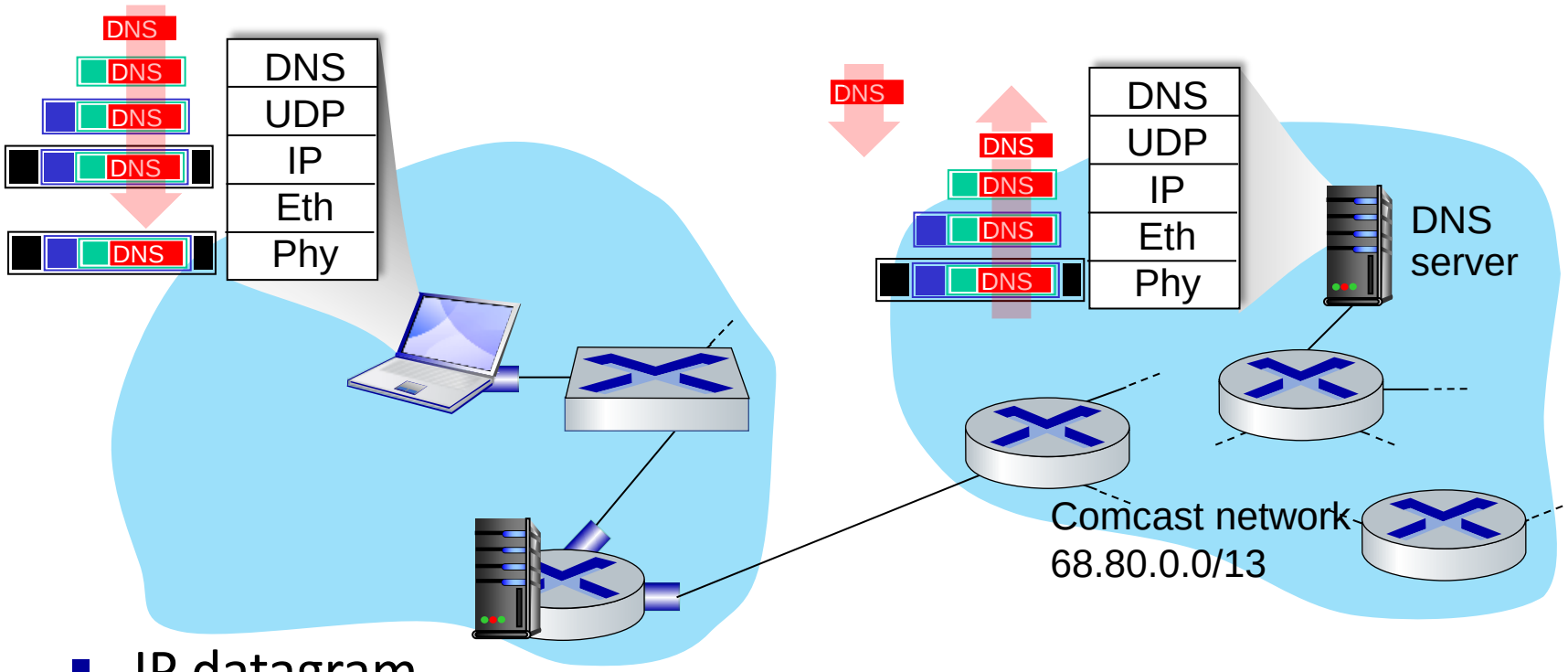

- demuxed to DNS
- DNS replies to client with IP address of www.google.com

- IP datagram containing DNS query forwarded via LAN switch from client to 1st hop router

- IP datagram forwarded from campus network into Comcast network, routed (tables created by RIP, OSPF, IS-IS and/or BGP routing protocols) to DNS server

A day in the life…TCP connection carrying HTTP

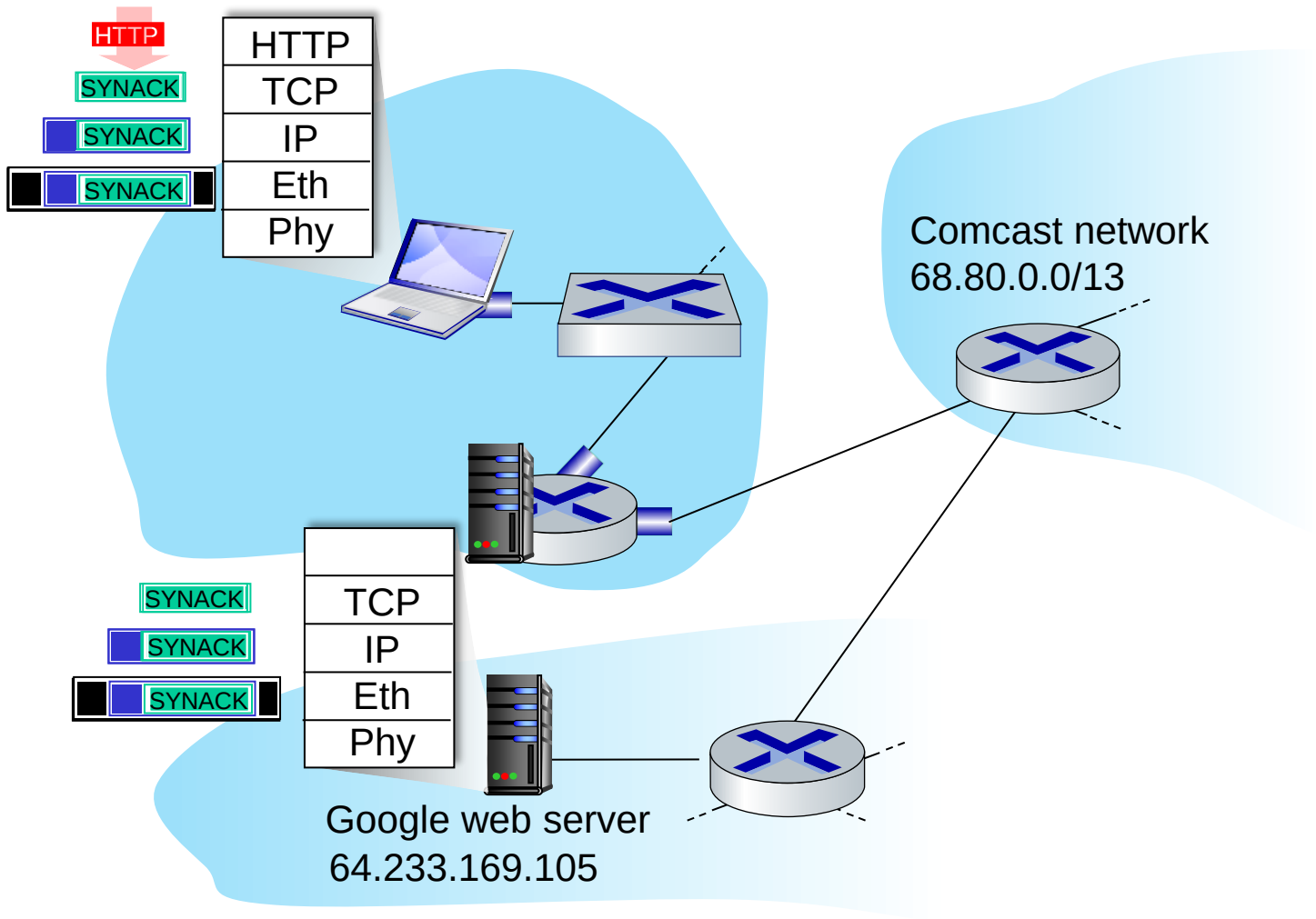

- to send HTTP request, client first opens TCP socket to web server
- TCP SYN segment (step 1 in TCP 3-way handshake) inter-domain routed to web server
- web server responds with TCP SYNACK (step 2 in TCP 3-way handshake)
- TCP connection established!

A day in the life… HTTP request/reply

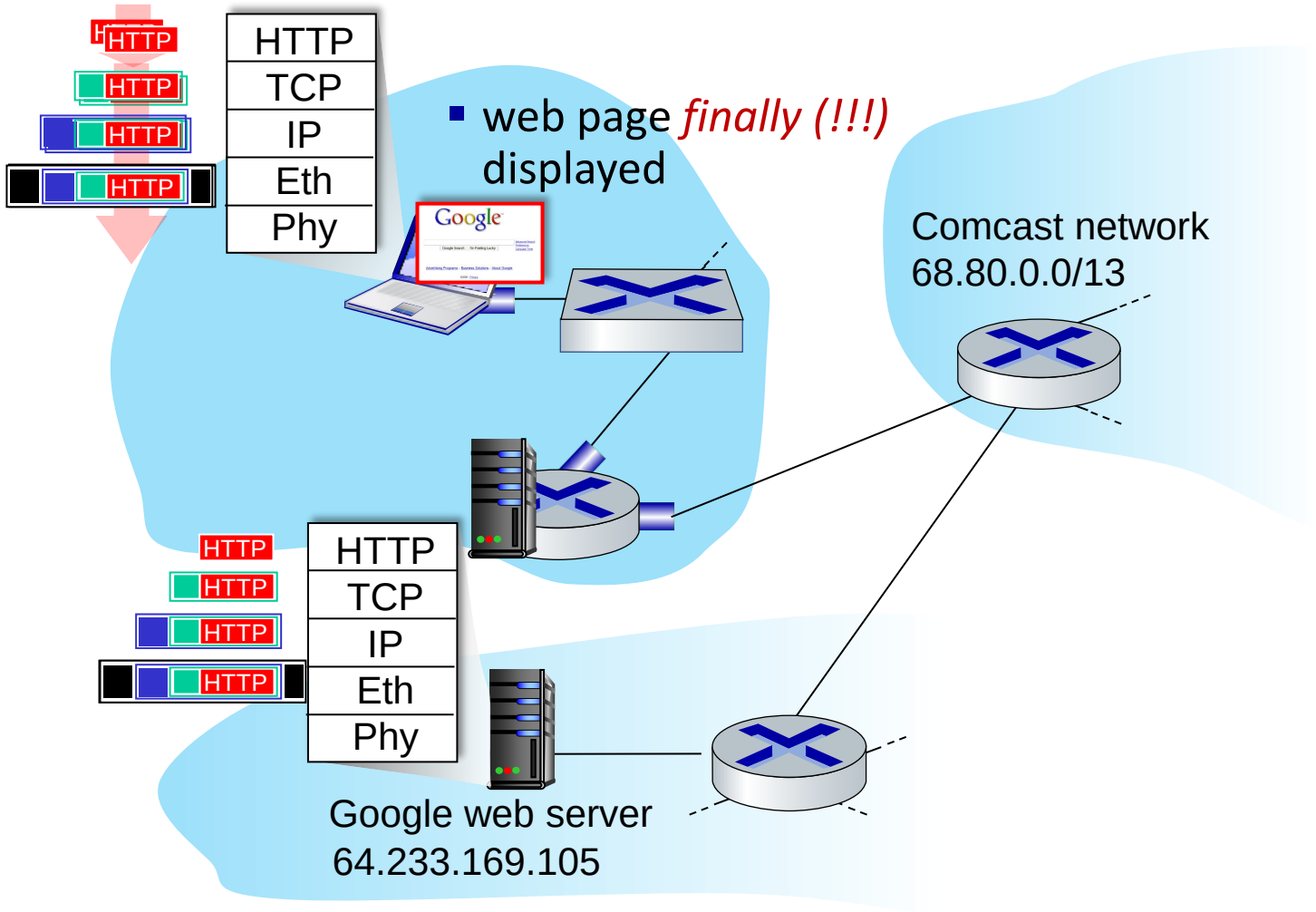

- HTTP request sent into TCP socket
- IP datagram containing HTTP request routed to www.google.com
- web server responds with HTTP reply (containing web page)
- IP datagram containing HTTP reply routed back to client

Chapter 6: Summary

- principles behind data link layer services:
  - error detection, correction
  - sharing a broadcast channel: multiple access
  - link layer addressing
- instantiation, implementation of various link layer technologies
  - Ethernet
  - switched LANS
- synthesis: a day in the life of a web request

Keywords

- Frame
- Flow control
- Error detection, correction
- Half duplex, full duplex
- Network interface card
- Multiple access protocol
- MAC address
- ARP table, TTL
- Routing to another subnet
- Ethernet
- Bus, switched
- Ethernet frame
- Transparent switch
- Plug-and-play
- Self-learning
- Switch table
- Flood, selectively send on just one link